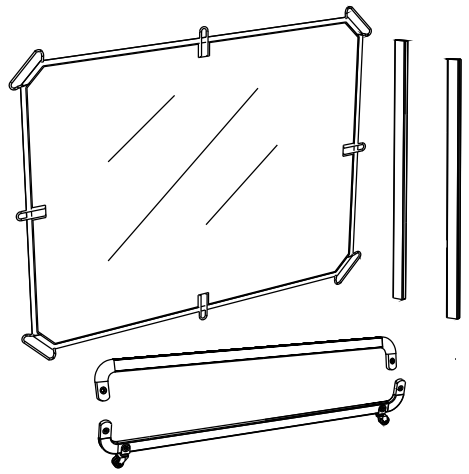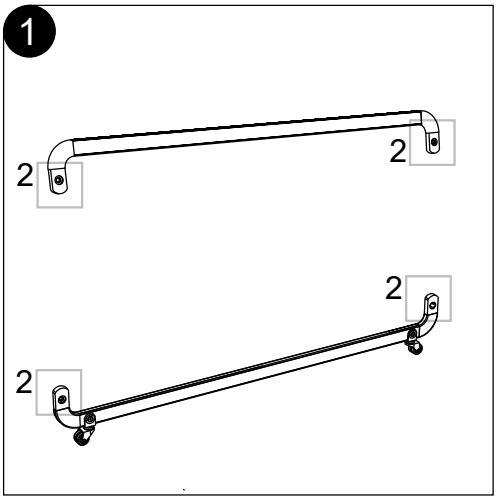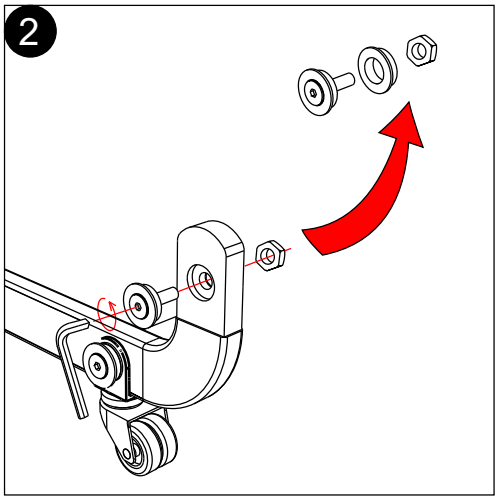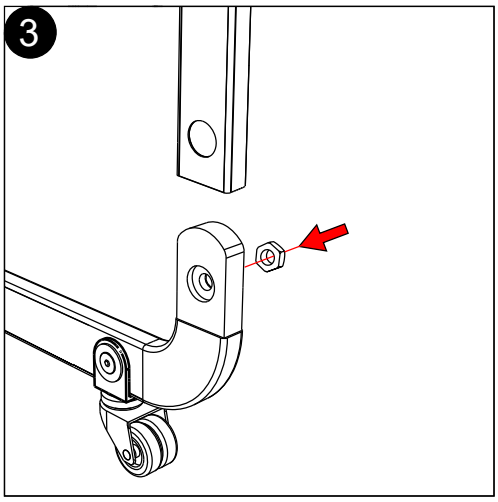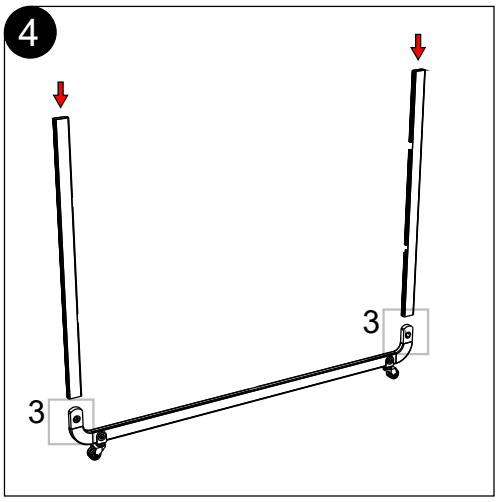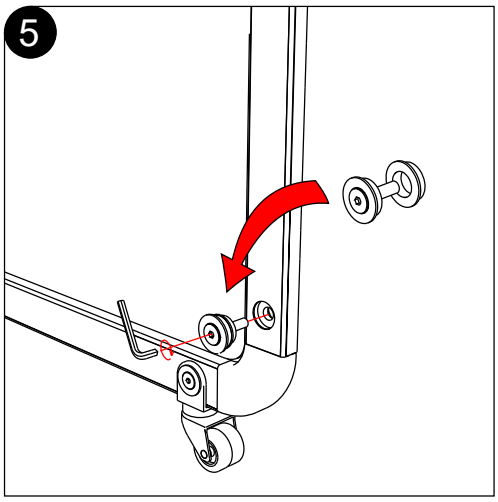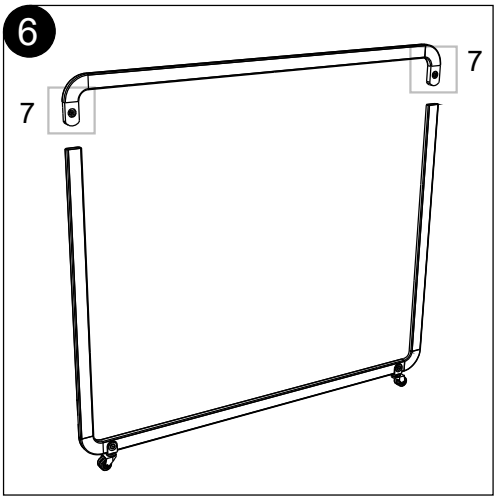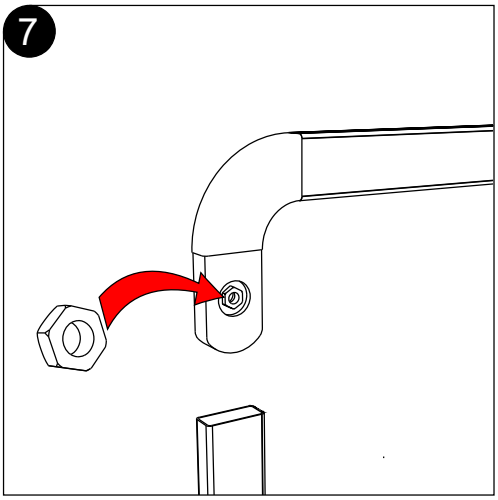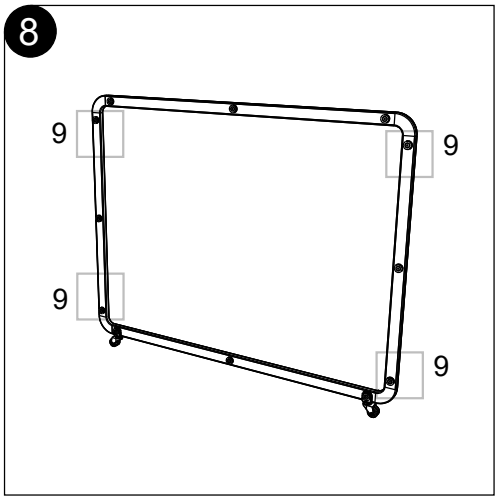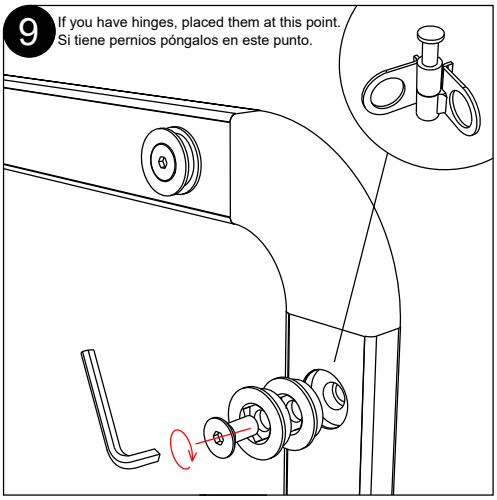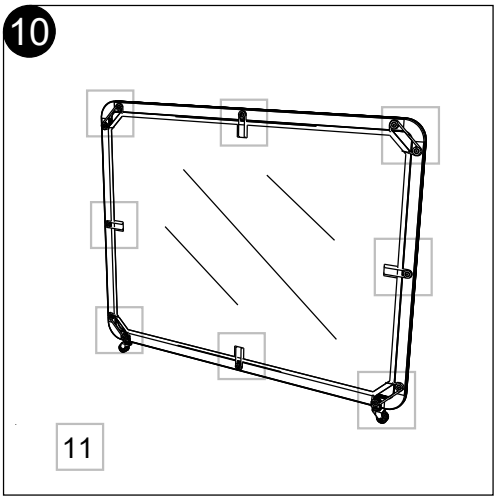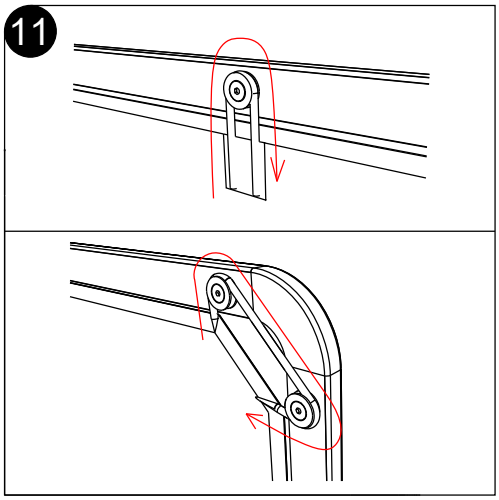SIENA PANEL SEPARADOR CON TELA
DIVIDER PANEL WITH FABRIC